3-way Mixing/Diverting, Characterized Control Valve, Stainless Steel Ball and Stem

Picture may differ from product

5-year warranty

Type overview

Type	DN
B339	1 1/2" [40]

Technical data

Functional data	Valve size [mm]	1.5" [40]
	Fluid	chilled or hot water, up to 60% glycol
	Fluid Temp Range (water)	0...250°F [-18...120°C]
	Body Pressure Rating	400 psi
	Close-off pressure Δps	200 psi
	Flow	A-port: as stated in chart B-port: 70% of A – AB Cv
	Flow characteristic	A-port equal percentage, B-port modified for constant common port flow
	Leakage rate	0% for A – AB, <2.0% for B – AB
	Pipe connection	Internal thread NPT (female)
	Servicing	maintenance-free
	Flow Pattern	3-way Mixing/Diverting
	Controllable flow range	75°
	Cv	29
Materials	Valve body	Nickel-plated brass body
	Stem	stainless steel
	Stem seal	EPDM (lubricated)
	Seat	PTFE
	Characterized disc	Stainless steel
	O-ring	EPDM (lubricated)
	Ball	stainless steel
Suitable actuators	Non Fail-Safe	ARB(X) ARQB(X) ARB(X) N4
	Spring	AFRB(X)

Safety notes

- WARNING: This product can expose you to lead which is known to the State of California to cause cancer and reproductive harm. For more information go to www.p65warnings.ca.gov

Product features

Application

This valve is typically used in air handling units on heating or cooling coils, and fan coil unit heating or cooling coils. Some other common applications include Unit Ventilators, VAV box re-heat coils and bypass loops. This valve is suitable for use in a hydronic system with variable or constant flow.

Flow/Mounting details

This valve is not suitable for use as a change over valve.

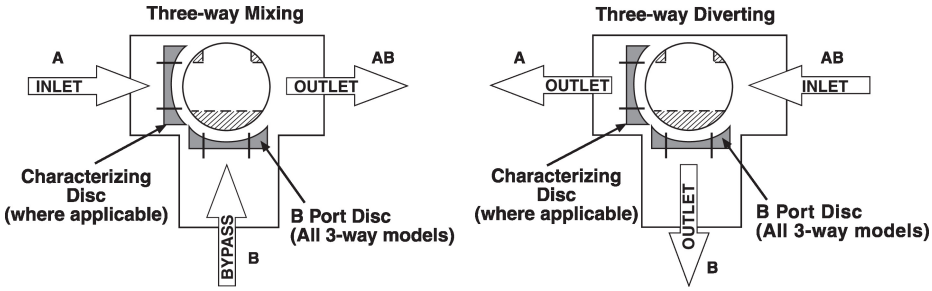

Dimensions

Type	DN	Weight
B339	1 1/2" [40]	3.7 lb [1.7 kg]

ARB, ARX

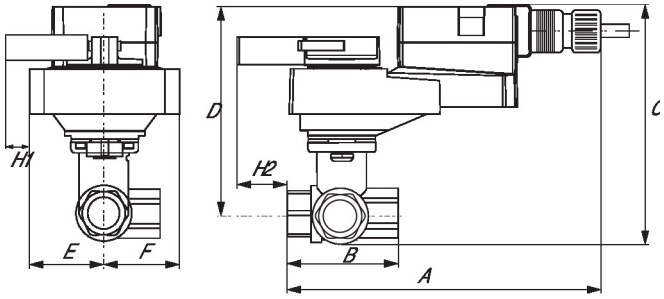

A	B	C	D	E	F	H1	H2
10.0" [254]	4.4" [112]	7.2" [184]	5.7" [146]	1.77" [44]	2.3" [58]	0.8" [20]	1.2" [30]

ARB N4, ARX N4

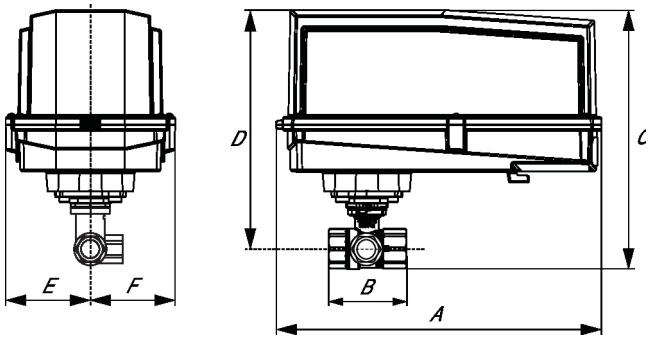

A	B	C	D	E	F
11.4" [289]	4.4" [112]	9.3" [236]	7.8" [198]	3.1" [80]	3.1" [80]

ARQB, ARQX

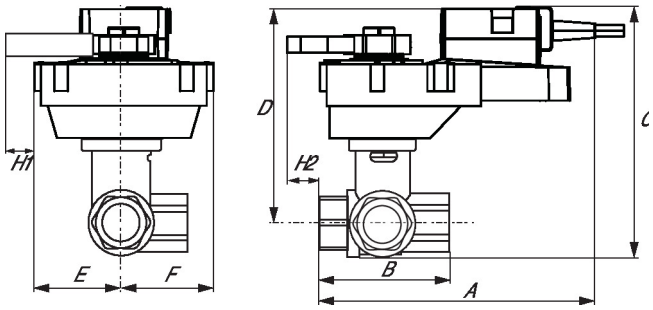

A	B	C	D	E	F	H1	H2
9.9" [251]	4.4" [112]	7.8" [199]	6.3" [161]	2.3" [58]	2.3" [58]	0.8" [20]	0.8" [20]

Dimensions

AFRB, AFRX

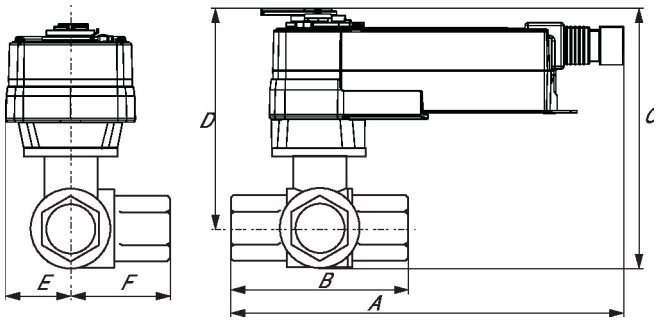

A	B	C	D	E	F
10.8" [275]	4.4" [112]	7.9" [201]	6.4" [162]	2.3" [58]	2.3" [58]

AFRB N4, AFRX N4

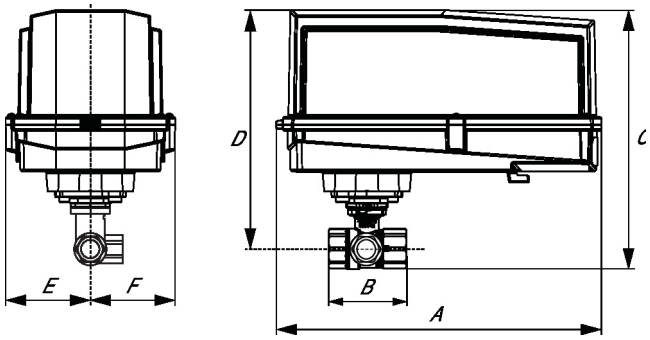

A	B	C	D	E	F
13.0" [330]	4.4" [112]	11.2" [284]	9.7" [246]	3.7" [95]	3.7" [95]

BELIMO

Modulating, Non fail-safe, 24 V

Technical data sheet ARX24-PC

5

5-year warranty

Technical data

Electrical data	Nominal voltage	AC/DC 24 V
	Nominal voltage frequency	50/60 Hz
	Nominal voltage range	AC 19.2...28.8 V / DC 21.6...28.8 V
	Power consumption in operation	3.5 W
	Power consumption in rest position	1.3 W
	Transformer sizing	5.5 VA
	Electrical Connection	Cable with conduit connector
	Overload Protection	electronic thoughout 0...90° rotation
Functional data	Operating range Y	0...20 V PhC
	Operating range Y note	Phasecut control (PhC) is only for the positive part of the sine wave (max. of 10 volts)
	Input impedance	8000 Ω (50mW)
	Position feedback U	2...10 V
	Direction of motion motor	selectable with switch 0/1
	Manual override	external push button
	Angle of rotation	90°
	Angle of rotation note	adjustable with mechanical stop
	Running Time (Motor)	90 s / 90°
	Running time motor variable	90 or 150 s
	Noise level, motor	45 dB(A)
	Position indication	Mechanical, pluggable
Safety data	Power source UL	Class 2 Supply
	Degree of protection IEC/EN	IP54
	Degree of protection NEMA/UL	NEMA 2
	Enclosure	UL Enclosure Type 2
	Agency Listing	cULus acc. to UL60730-1A/-2-14, CAN/CSA E60730-1:02 CE acc. to 2014/30/EU and 2014/35/EU
	Quality Standard	ISO 9001
	UL 2043 Compliant	Suitable for use in air plenums per Section 300.22(C) of the NEC and Section 602 of the IMC
	Ambient humidity	Max. 95% RH, non-condensing
	Ambient temperature	-22...122°F [-30...50°C]
	Storage temperature	-40...176°F [-40...80°C]
	Servicing	maintenance-free
Weight	Weight	2.4 lb [1.1 kg]
Materials	Housing material	Galvanized steel and plastic housing

Footnotes †Rated Impulse Voltage 800 V, Type action 1, Control Pollution Degree 3.

Electrical installation

INSTALLATION NOTES

1 Provide overload protection and disconnect as required.

3 Actuators may also be powered by DC 24 V.

5 Only connect common to negative (-) leg of control circuits.

11 Actuators may be connected in parallel if not mechanically linked. Power consumption and input impedance must be observed.

Meets cULus requirements without the need of an electrical ground connection.

Warning! Live electrical components!
During installation, testing, servicing and troubleshooting of this product, it may be necessary to work with live electrical components. Have a qualified licensed electrician or other individual who has been properly trained in handling live electrical components perform these tasks. Failure to follow all electrical safety precautions when exposed to live electrical components could result in death or serious injury.
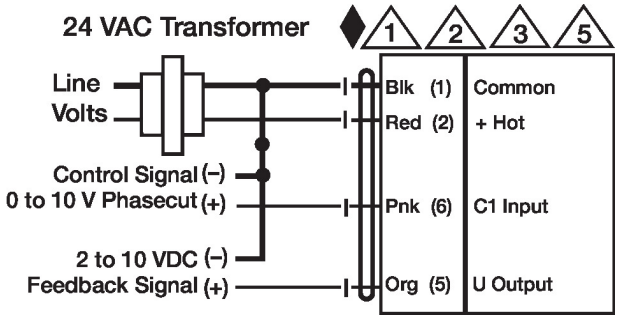
Wiring diagrams
Phasecut Control