Actuator solution for 2-way and 3-way short stroke globe valves (Retrofit)

- Actuating force 150 N
- Nominal voltage AC/DC 24 V
- Control communicative
- Stroke 6.5 mm
- Fixing to valves with M30x1.5
- Flexible adjustment to stem height and stroke length
- Communication via BACnet MS/TP or Modbus RTU
- mounting on the valve without tools



Picture may differ from product

Technical data

Electrical data	Nominal voltage	AC/DC 24 V
	Nominal voltage frequency	50/60 Hz
	Nominal voltage range	AC 19.2...28.8 V / DC 21.6...28.8 V
	Power consumption in operation	0.7 W
	Power consumption in rest position	0.6 W
	Power consumption for wire sizing	1.5 VA
	Connection supply / control	Cable 1 m, 4x 0.34 mm²
Data bus communication	Communicative control	BACnet MS/TP (factory setting) Modbus RTU
	Number of nodes	BACnet / Modbus see interface description
Functional data	Actuating force motor	150 N
	Manual override	No
	Stroke	6.5 mm
	Stroke limitation	below 2.5 mm only for open/close applications
	Actuator fixing	M30x1.5
	Running time motor	75 s / 6.5 mm
	Sound power level motor	35 dB(A)
	Position indication	Mechanical
Safety data	Protection class IEC/EN	III, Safety Extra-Low Voltage (SELV)
	Degree of protection IEC/EN	IP40
	EMC	CE according to 2014/30/EU
	Certification IEC/EN	IEC/EN 60730-1 and IEC/EN 60730-2-14
	Type of action	Type 1
	Rated impulse voltage supply / control	0.8 kV
	Pollution degree	2
	Ambient humidity	Max. 95% RH, non-condensing
	Ambient temperature	5...40°C [41...104°F]
	Storage temperature	-40...80°C [-40...176°F]
	Servicing	maintenance-free
Weight	Weight	0.23 kg

Safety notes

- This device has been designed for use in stationary heating, ventilation and air-conditioning systems and must not be used outside the specified field of application, especially in aircraft or in any other airborne means of transport.
- Outdoor application: Only possible if no (sea) water, snow, ice, sunlight or aggressive gases act directly on the device and if it is ensured that the ambient conditions remain within the limit values specified in the data sheet at all times.
- Only authorised specialists may carry out installation. All applicable legal or institutional installation regulations must be complied with during installation.
- The device may only be opened at the manufacturer's site. It does not contain any parts that can be replaced or repaired by the user.
- Cables must not be removed from the device.
- The device contains electrical and electronic components and must not be disposed of as household refuse. All locally valid regulations and requirements must be observed.

Product features

Operating mode
The actuator is fitted with an integrated interface for BACnet MS/TP and Modbus RTU, it receives the digital control signal from the control system and returns the current status.

Simple direct mounting
The actuator solution can be mounted tool-free on short stroke globe valves with thread M30x1.5. The actuator can be rotated by 360° on the valve neck, provided the size of the installed valve permits it.

Adjustable stroke
After successful manual stem adaptation, the stroke range adapts to the stroke of the valve.
The maximum possible stroke of the actuator depends on the height h of the third-party valve.

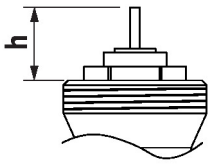

h [mm]	h_a [mm]
8.3	1
8.5	1.2
9	1.7
9.5	2.2
10	2.7
10.5	3.2
11	3.7
11.5	4.2
12	4.7
12.5	5.2
13	5.7
13.5	6.2
13.8...18.5	6.5

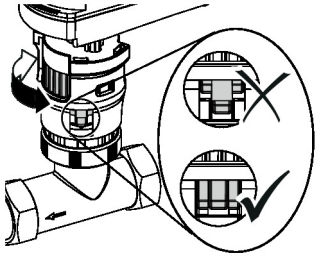

h_a = maximum stroke

High functional reliability
The actuator is overload protected, requires no limit switches and automatically stops when the end stop is reached.

Position indication
The stroke is indicated mechanically by a position indicator on the actuator.

Home position
Factory setting: Actuator in 0° position

Accessories

Tools

Description	Type
Service tool for wired and wireless setup, on-site operation and troubleshooting.	Belimo Assistant 2
Belimo Assistant Link Bluetooth and USB to NFC and MP-Bus converter for configurable and communicative devices	LINK.10

Mechanical accessories

Description	Type
Housing cover CQ, Colour: white (RAL 9010)	ZCQ-W

Electrical installation

The wiring of the line for BACnet MS/TP / Modbus RTU is to be carried out in accordance with applicable RS-485 regulations.

Modbus / BACnet: Supply and communication are not galvanically isolated. COM and ground of the devices must be connected to each other.

Wire colours:
1 = black
2 = red
6 = pink
7 = grey

Functions:
C1 = D- (wire 6)
C2 = D+ (wire 7)

BACnet MS/TP / Modbus RTU

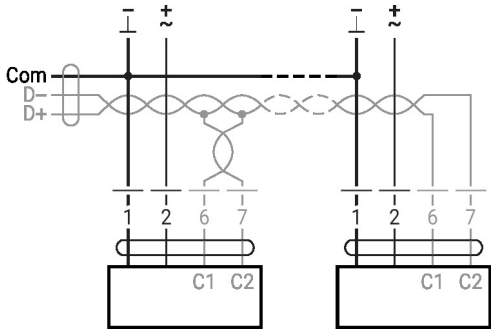

Operating controls and indicators

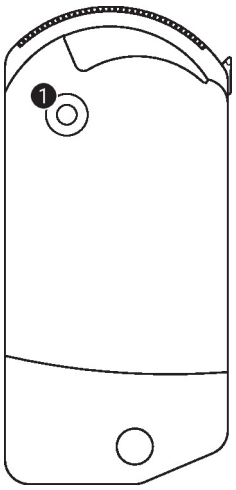

1 LED display yellow

Off:	No power supply or malfunction
On:	In operation
Flickering:	BACnet / Modbus communication active

Installation notes

Motorisation

The maximum permissible fluid temperature for the actuator is 100°C. For more detailed information on fluid temperatures and close-off pressures of third-party valves, please refer to the documentation of the respective manufacturer. When motorising short stroke globe valves, an end stop is required on the valve stem. The valve stem must be able return to its initial position by itself. This enables reliable adaptation of the actuator.

Service

Using Belimo Assistant 2, device parameters can be modified. Belimo Assistant 2 can operate on a smartphone, tablet or PC. The available connection options vary depending on the hardware on which Belimo Assistant 2 is installed.

For more information about Belimo Assistant 2, refer to the Quick Guide – Belimo Assistant 2.

Wireless connection

Belimo devices marked with the NFC logo can be accessed either directly with an NFC-capable smartphone or with a Bluetooth-capable smartphone connected to Belimo Assistant Link.

Requirement:

- NFC- or Bluetooth-capable smartphone or tablet
- Belimo Assistant 2 (Google Play and Apple App Store)

Align the NFC-capable smartphone or Belimo Assistant Link with the device's NFC logo so that both NFC antennas are superposed.

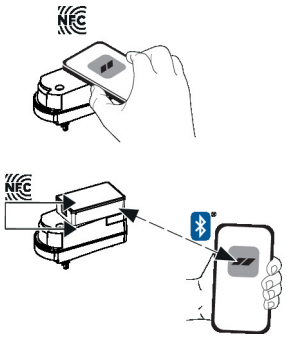

Dimensions

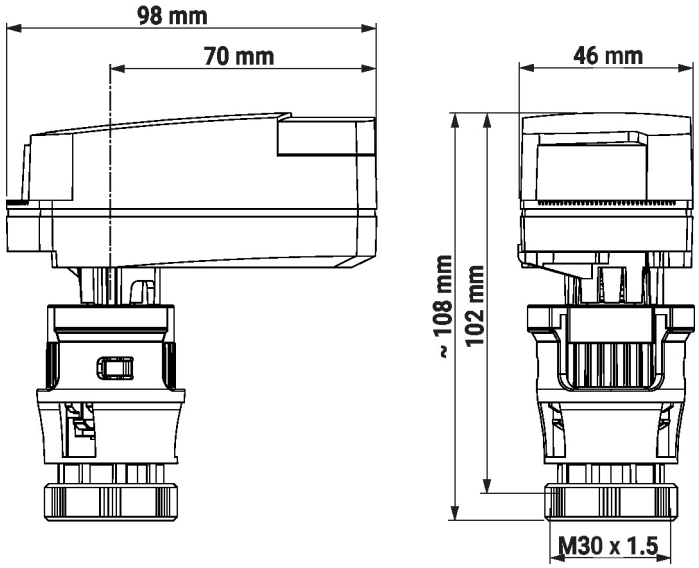

Further documentation

- BACnet Interface description
- Modbus Interface description
- The complete product range for water applications
- Installation instructions for short stroke globe valves and and actuator solutions
- General notes for project planning
- Quick Guide – Belimo Assistant 2