ANSI-Flanged Globe Valves

- chilled or hot water, up to 60% glycol, steam
- ANSI Class 250, up to 280 psi below 350°F
- 250
- Cast iron - ASTM A126 Class B

Picture may differ from product

5-year warranty

Type overview

Type	DN
G680C-250	3" [80]

Technical data

Functional data	Valve size [mm]	3" [80]
	Fluid	chilled or hot water, up to 60% glycol, steam
	Fluid Temp Range (water)	32...350°F [0...176°C]
	Fluid Temp Range (steam)	32...280°F [0...138°C]
	Body Pressure Rating	ANSI Class 250, up to 280 psi below 350°F
	Flow characteristic	equal percentage
	Leakage rate	ANSI Class III
	Pipe connection	Flange for use with ASME/ANSI class 250
	Servicing	repack/rebuild kits available
	Rangeability Sv	91:1
	Max Differential Pressure (Steam)	15 psi [103 kPa]
	Flow Pattern	2-way
	Controllable flow range	stem up - open A – AB
	Cv	90
	Maximum Inlet Pressure (Steam)	35 psi [241 kPa]
Materials	Valve body	Cast iron - ASTM A126 Class B
	Valve plug	bronze
	Stem	stainless steel
	Stem seal	NLP EPDM (no lip packing)
	Seat	Stainless steel AISI 316
Suitable actuators	Non Fail-Safe	EVB(X)
	Spring	AF 2*AFB(X)
	Electronic fail-safe	AVKB(X)

Safety notes

- WARNING: This product can expose you to chemicals including lead, which is known to the State of California to cause cancer and reproductive harm. For more information go to www.p65warnings.ca.gov
- The valve has been designed for use in stationary heating, ventilation and air-conditioning systems and must not be used outside the specified field of application, especially in aircraft or in any other airborne means of transport.
- Only authorized specialists may carry out installation. All applicable legal or institutional installation regulations must be complied with during installation.
- The valve does not contain any parts that can be replaced or repaired by the user.
- When determining the flow rate characteristic of controlled devices, the recognised directives must be observed.

Dimensions

Type	DN	Weight
G680C-250	3" [80]	74.84 lb [34.020000000000003 kg]

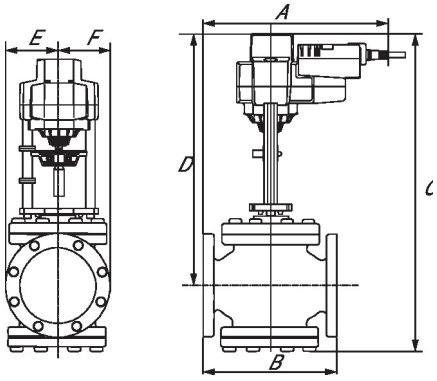

EVB, EVX, RVB, RVX

A	B	C	D	E	F	Number of Bolt Holes
12.6" [320]	10.7" [273]	24.6" [626]	19.3" [489]	4.1" [105]	4.1" [105]	8

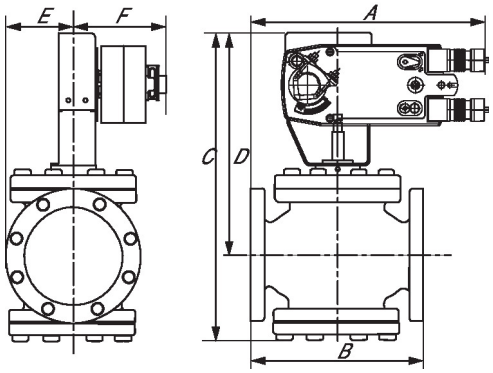

AFB, AFX

A	B	C	D	E	F	Number of Bolt Holes
12.6" [320]	10.7" [273]	22.7" [577]	17.8" [453]	4.1" [105]	5.3" [135]	8

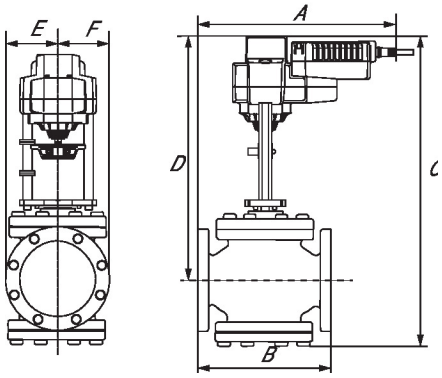

AVKB, AVKX

Dimensions

A	B	C	D	E	F	Number of Bolt Holes
12.6" [320]	10.7" [273]	24.6" [626]	19.3" [489]	4.1" [105]	4.1" [105]	8

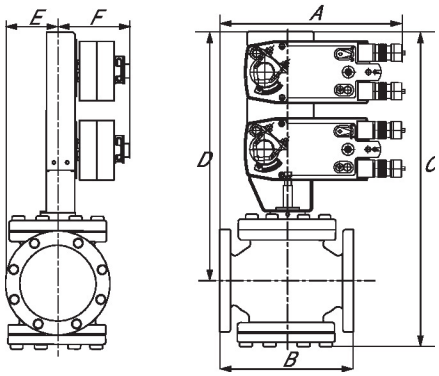

2*AFB, 2*AFX

A	B	C	D	E	F	Number of Bolt Holes
12.2" [310]	10.7" [273]	30.0" [762]	25.1" [638]	3.9" [100]	5.3" [135]	8