i

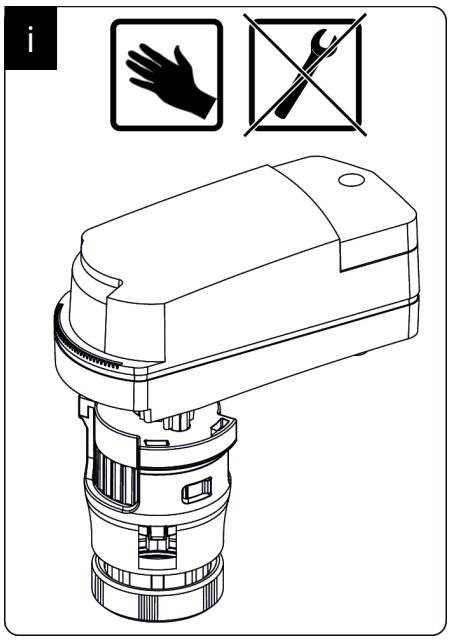

1

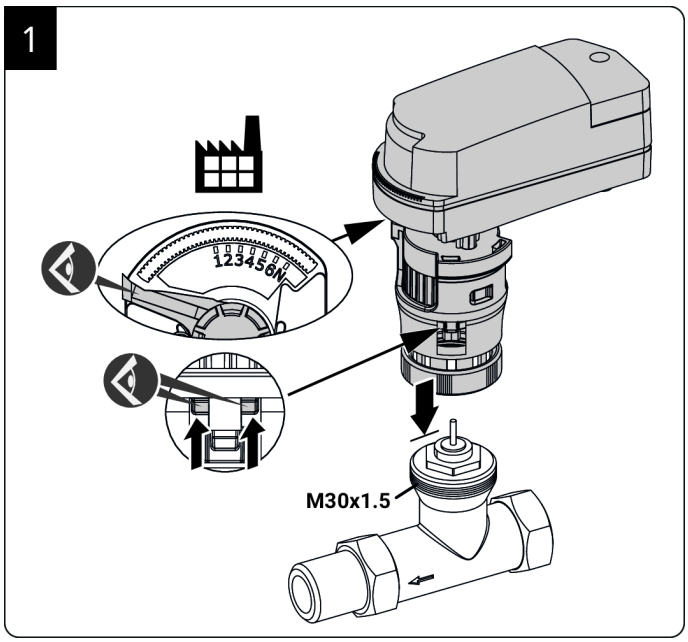

2

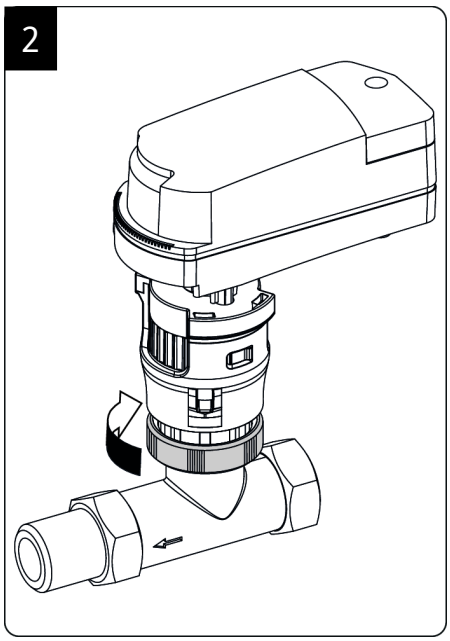

3

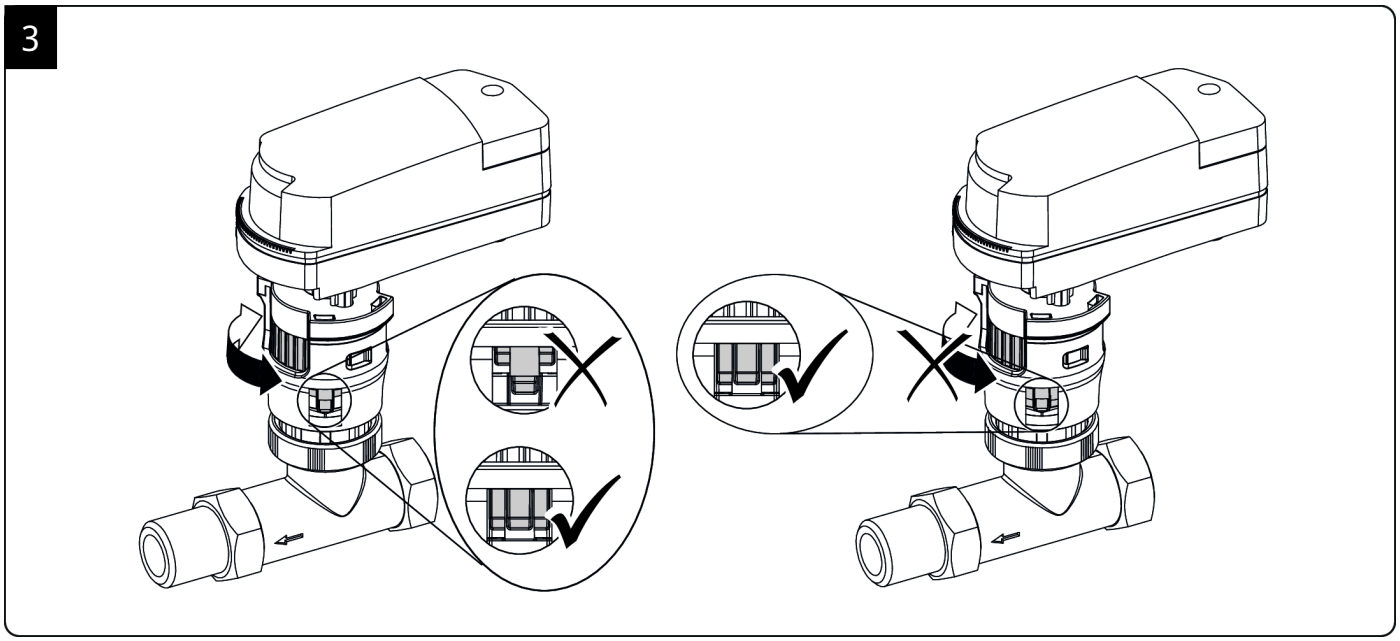

!

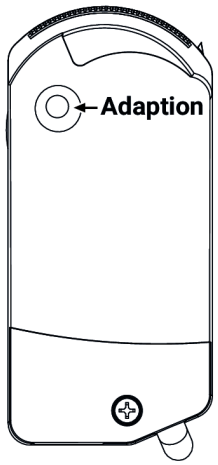

!

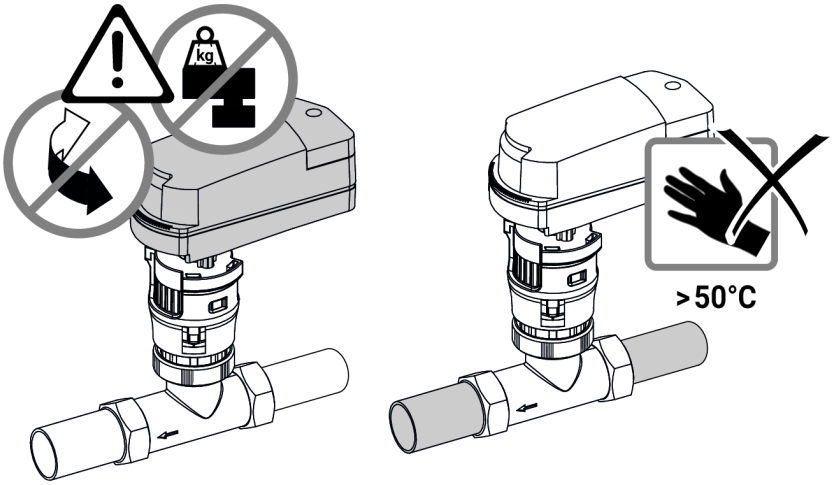

i

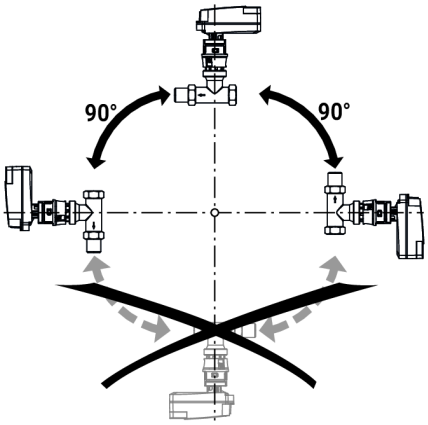

i

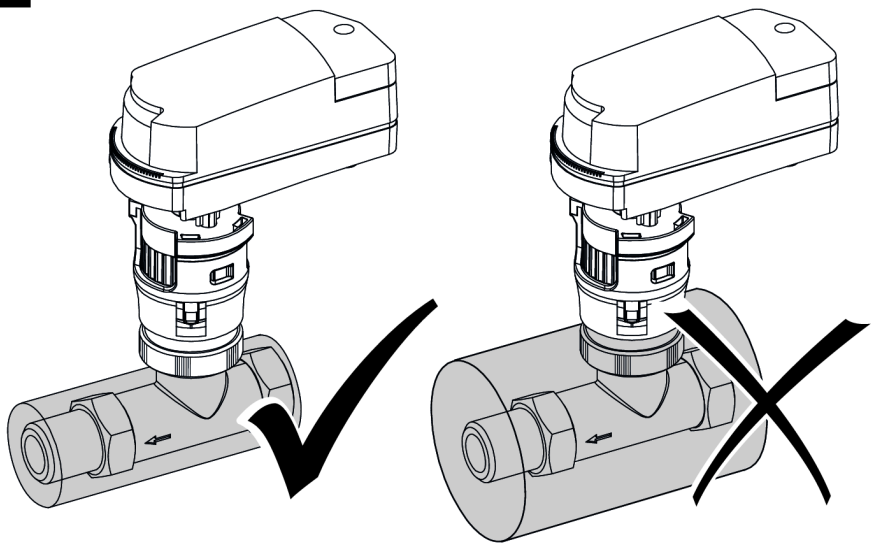





www.belimo.com/safety





Belimo How-to Video

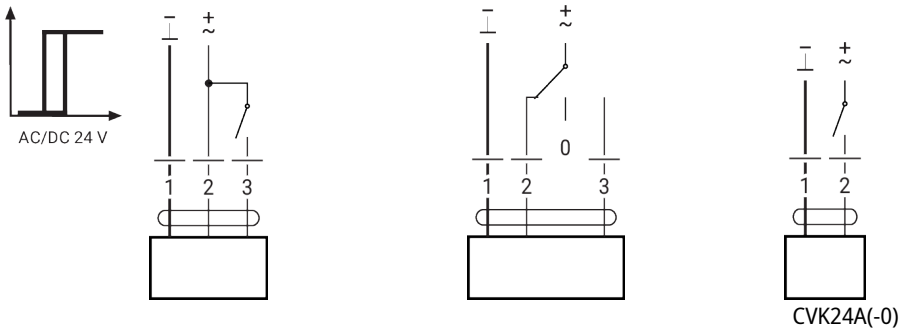
AC/DC 24 V
– ⊥
+ ~
1 2 3
0
CVK24A(-0)

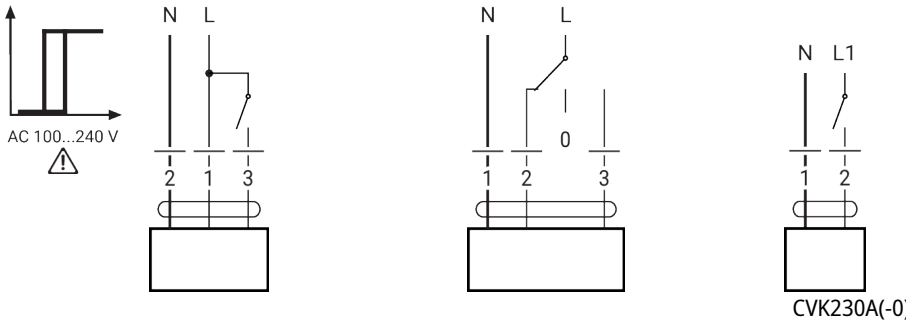
AC 100...240 V
N L
2 1 3
1 2 3
N L1
CVK230A(-0)

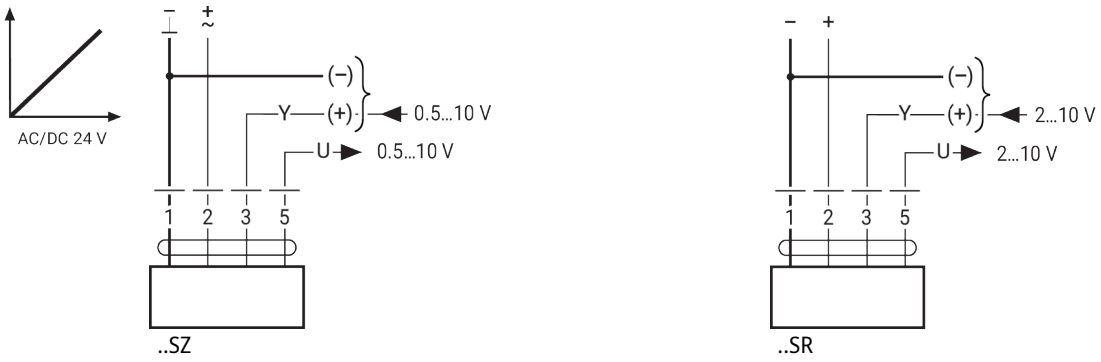
AC/DC 24 V
(–)
Y
(+)
U
0.5...10 V
1 2 3 5
..SZ
2...10 V
..SR

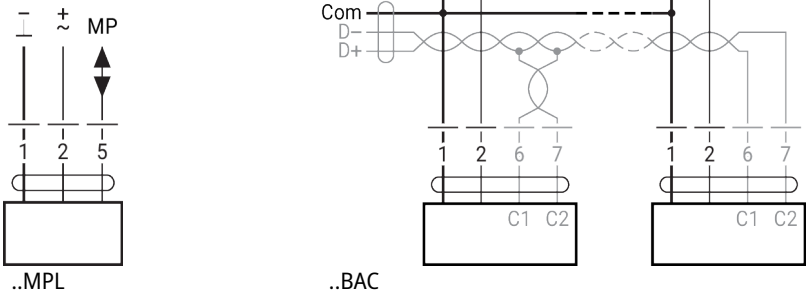
MP
1 2 5
..MPL
Com
D–
D+
1 2 6 7
C1 C2
..BAC