72070-00001.A

i

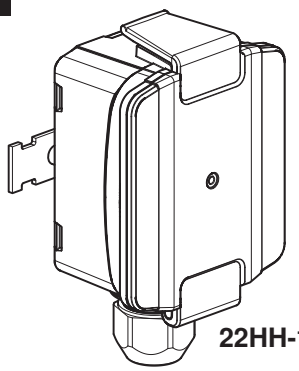

BELIMO
M20
A-22G-A01.1

AGRO/FLEXA
M20
8220.40

AGRO/FLEXA
M20
5020.055.218

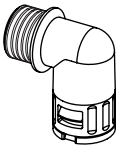

AGRO/FLEXA
M20
5020.051.220

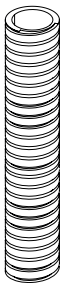

AGRO/FLEXA
PA6
0233.202.012

1

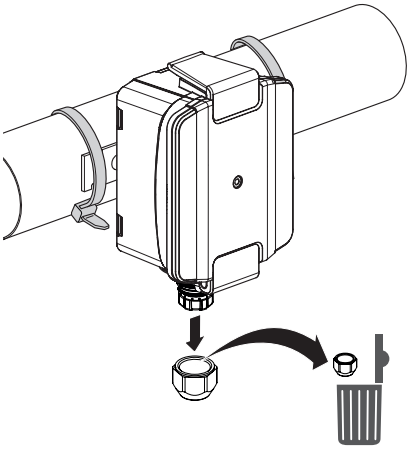

2

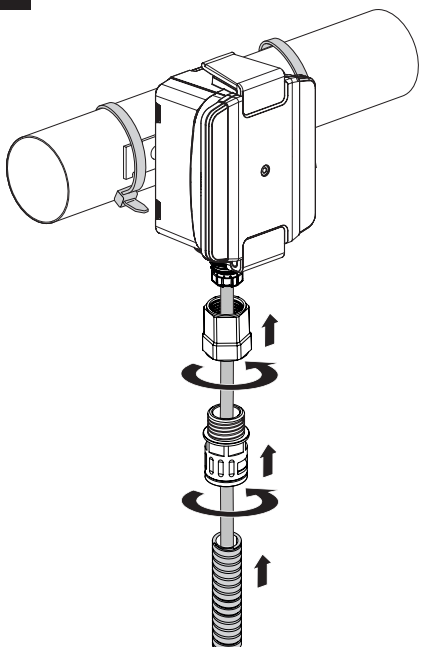

3

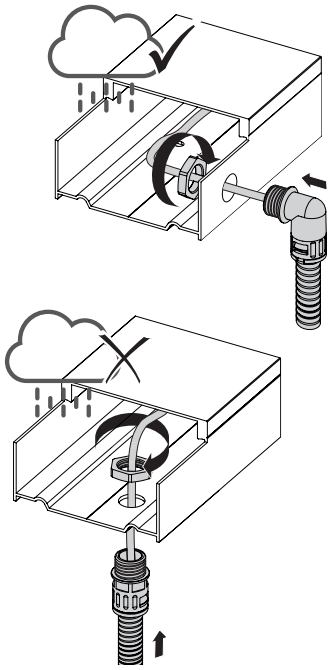

4

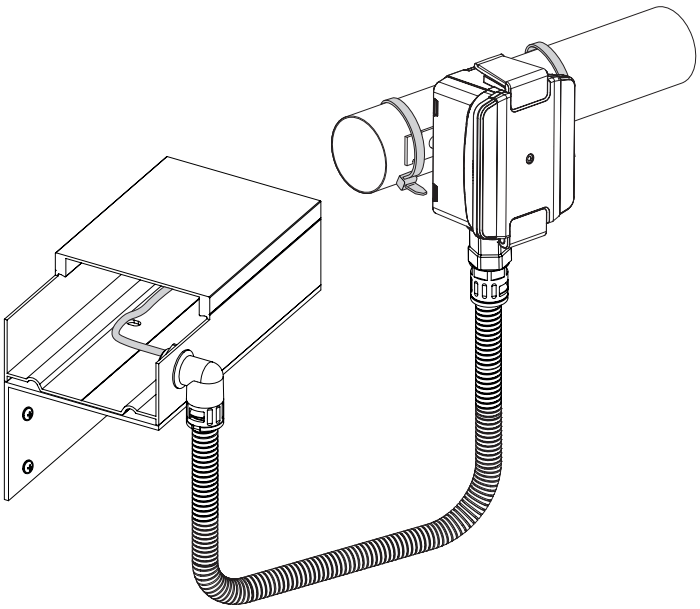

www.belimo.com/safety