71971-00001.C

i

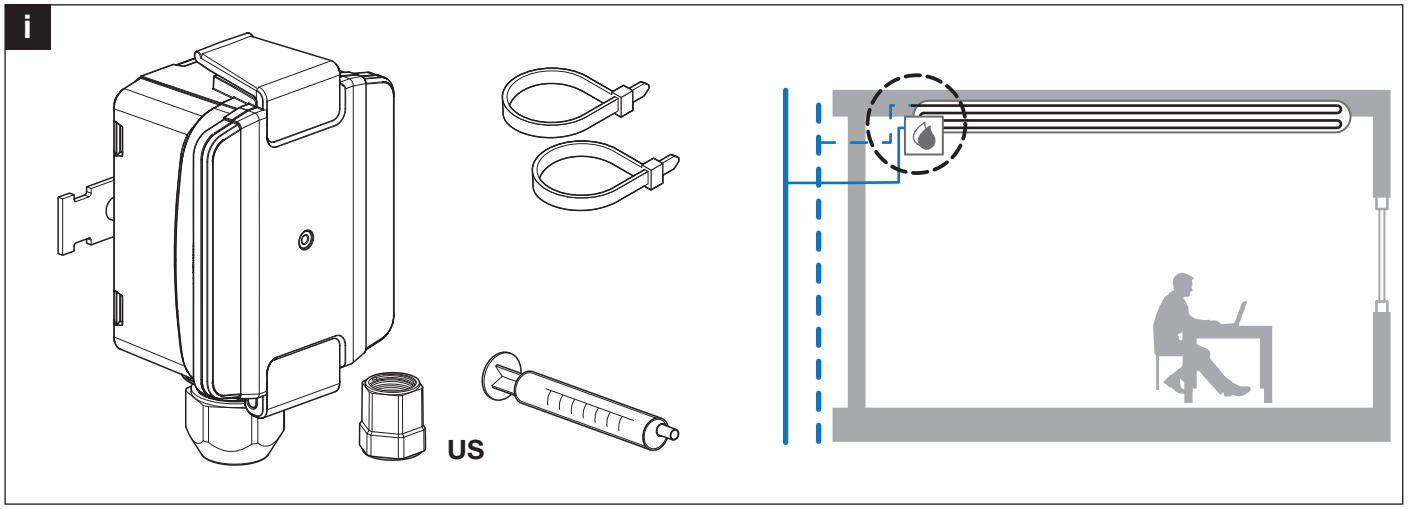

1

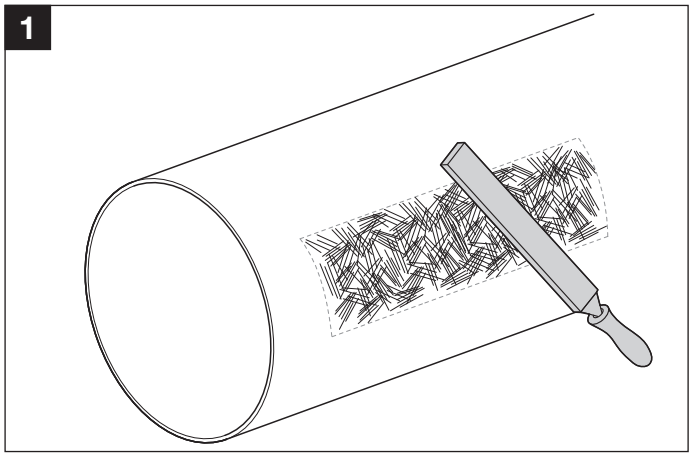

2

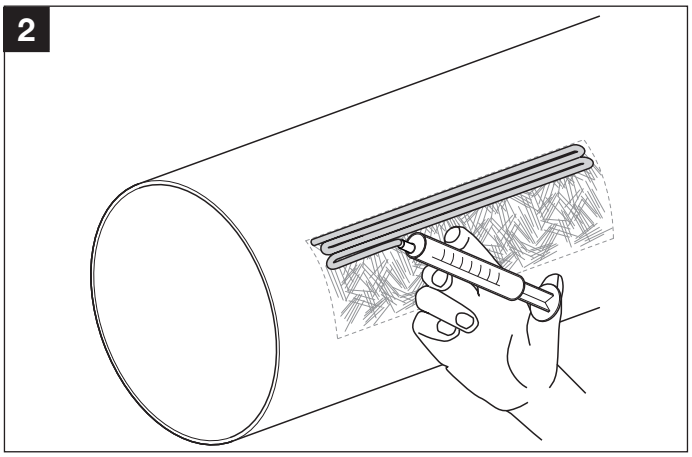

3

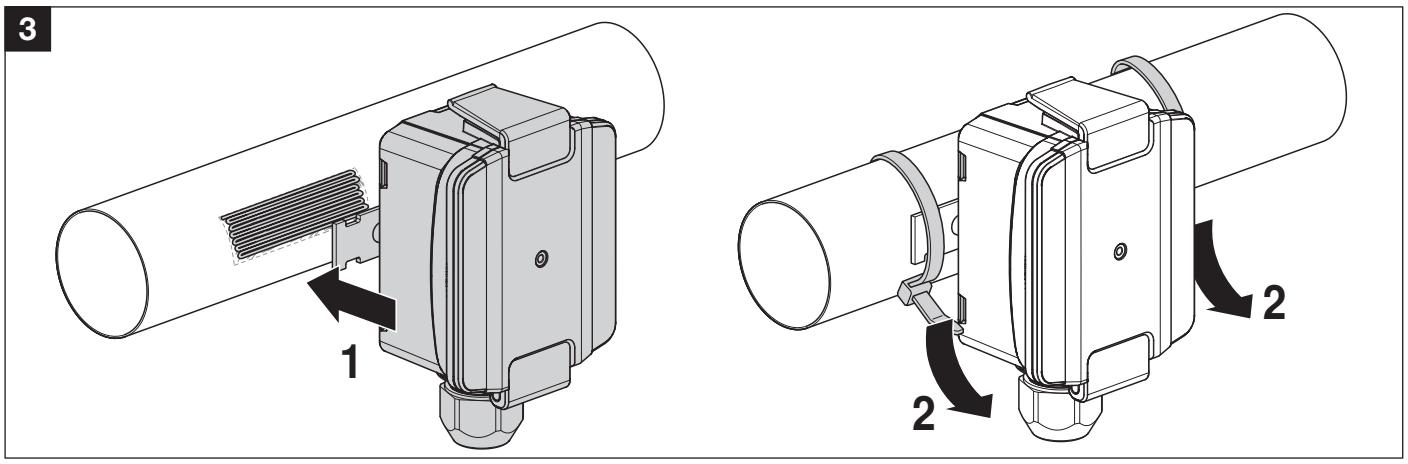

!

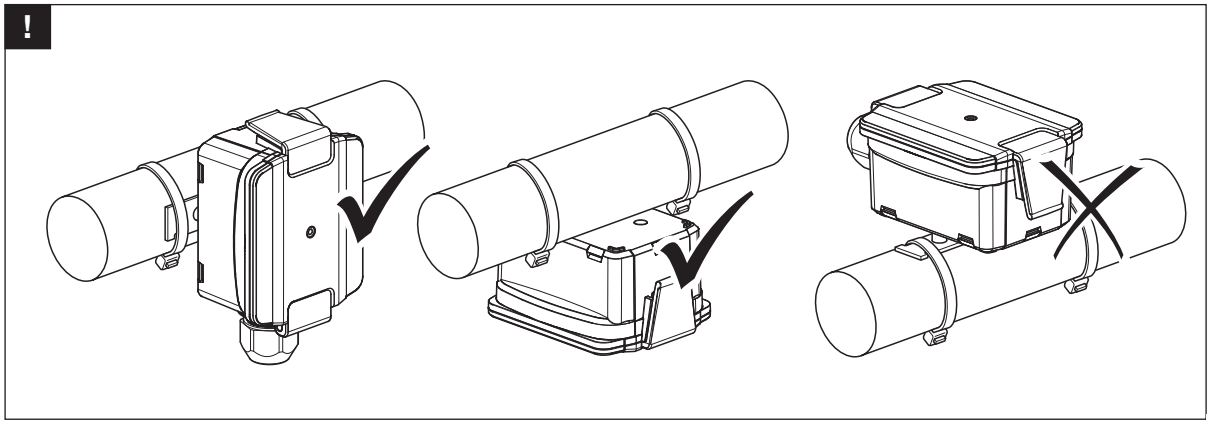

www.belimo.com/safety

4

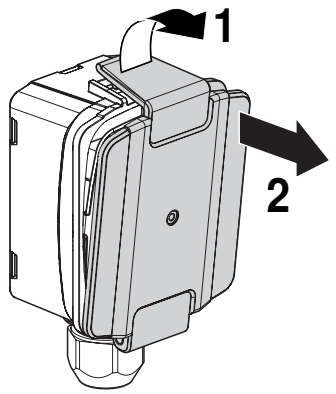
1
2

5

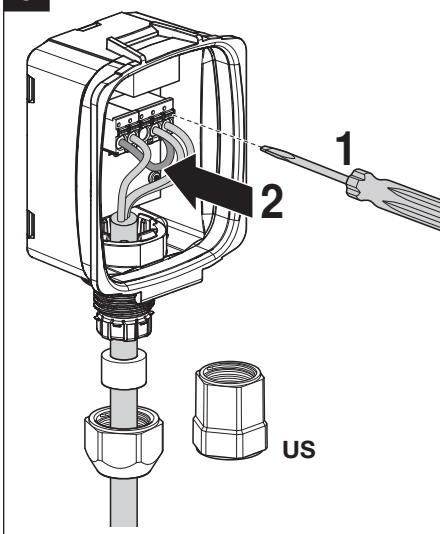
1
2
US

6

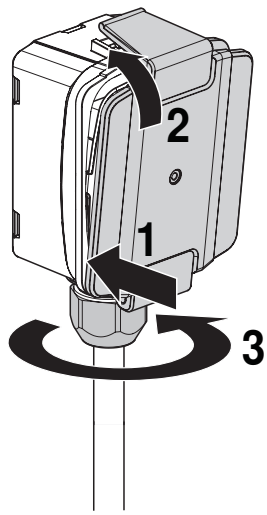
2
1
3

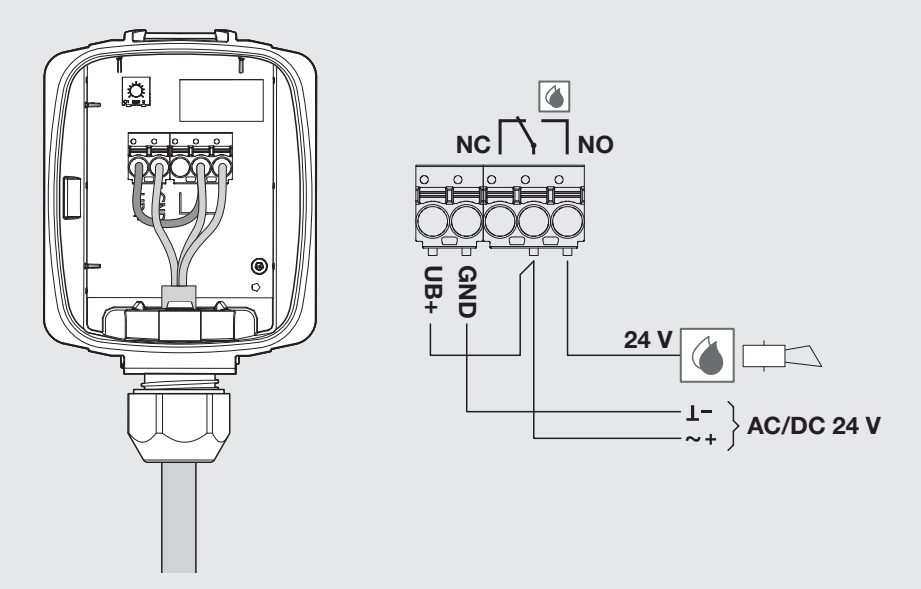
NC
NO
UB+
GND
24 V
⊥−
~ +
AC/DC 24 V

i

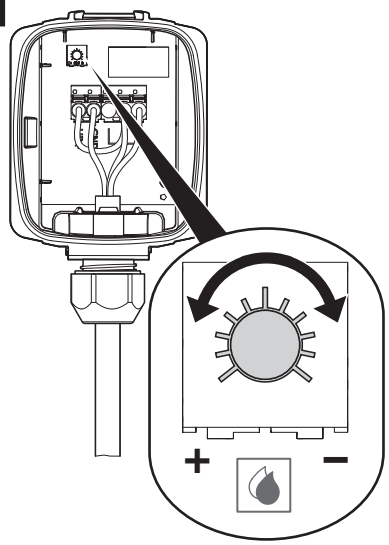
+
−

i TEST

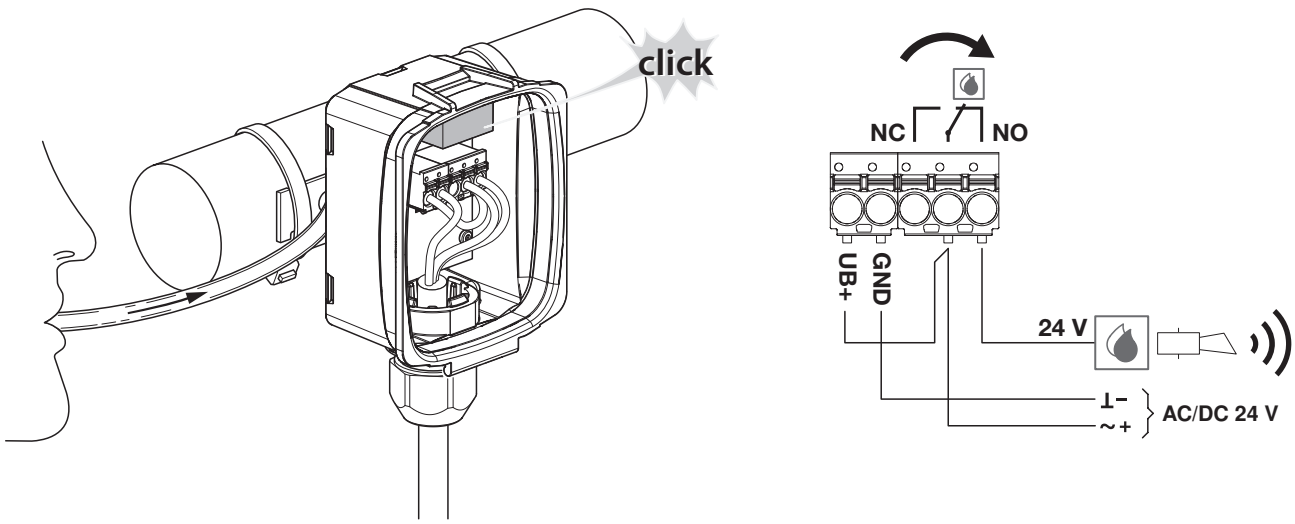
click
NC
NO
UB+
GND
24 V
⊥−
~ +
AC/DC 24 V