71478-00001.B

QUICK MOUNT VISUAL INSTRUCTION MANUAL

# GR & GM NEMA 4 Actuators with F6 Butterfly Valves

1

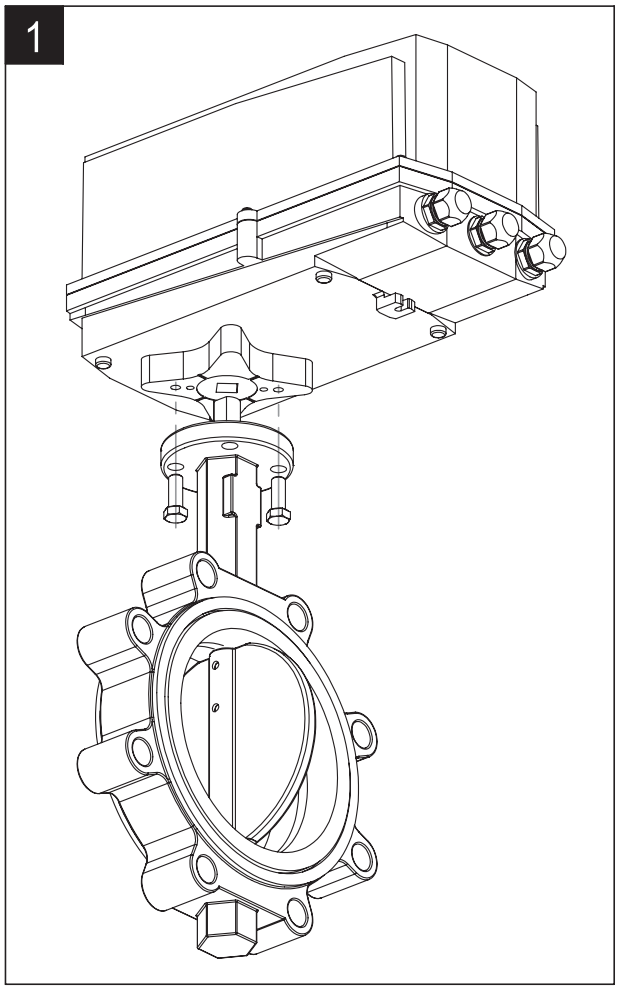

2

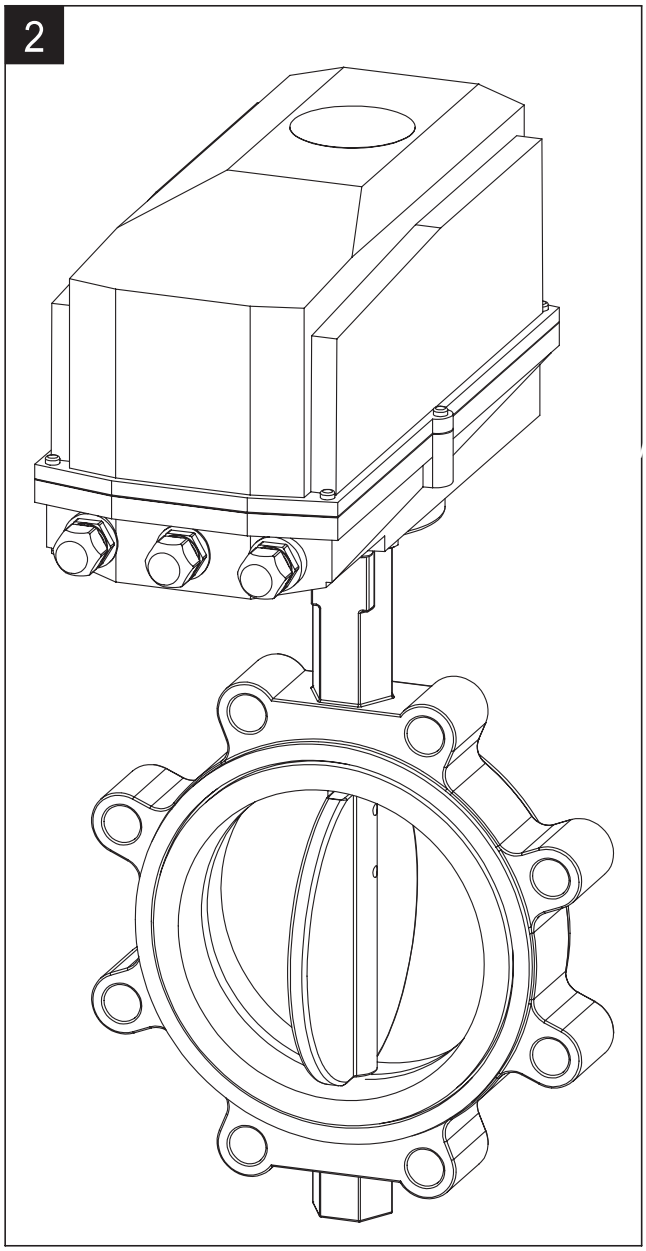

71478-00001.B

## Non-Spring Return Actuator with -3 and -SR

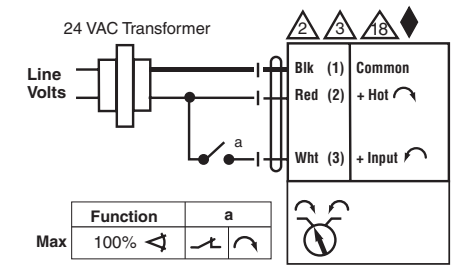


**On/Off**

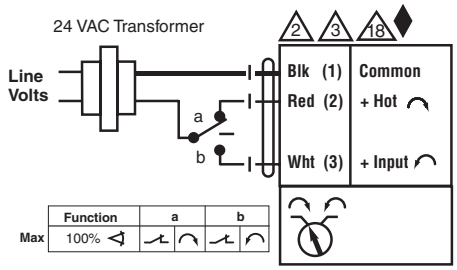


**Floating Point**

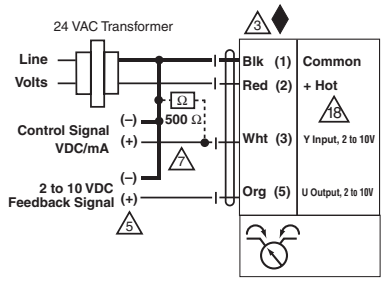


**VDC / 4 to 20 mA**

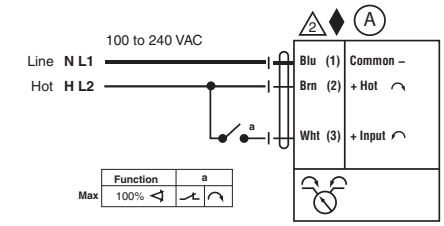


**On/Off**

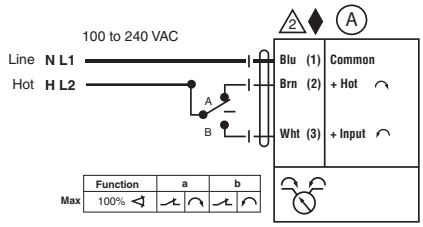


**Floating Point**

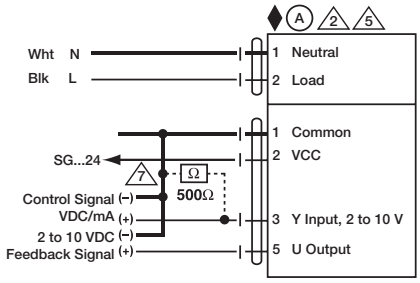


**2 to 10 VDC / 4 to 20 mA Control 100 to 240 VAC**

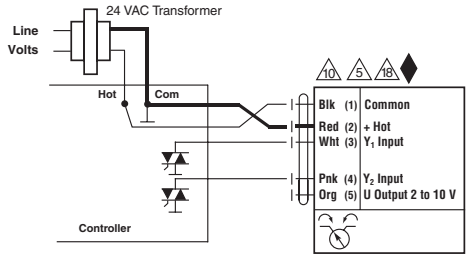


**Triac Sink**

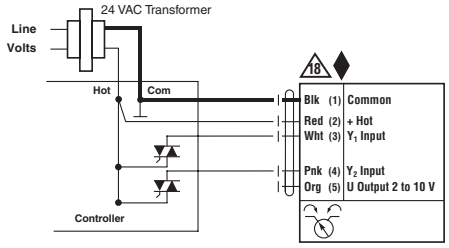


**Triac Source**

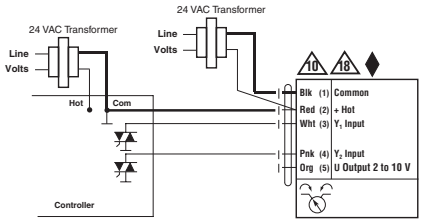


**Triac Sink with Separate Transformer**

## Non-Spring Return Actuator with MFT

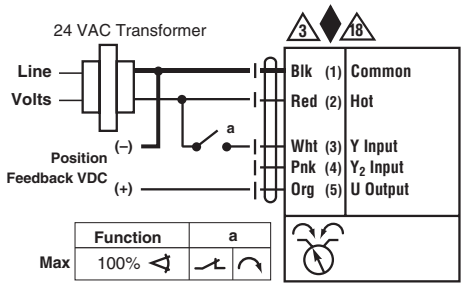


**On/Off**

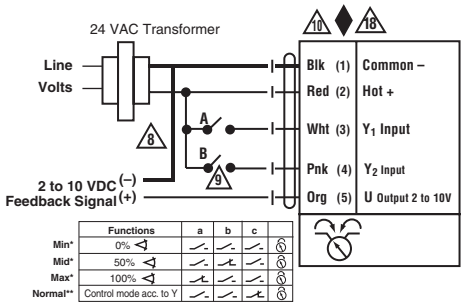


**Floating Point**

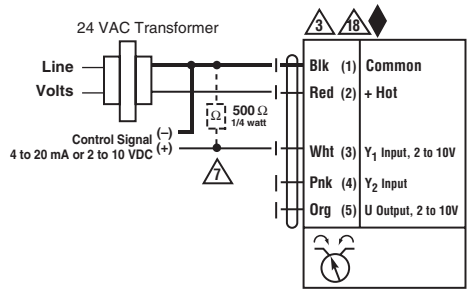


**VDC / 4 to 20 mA**

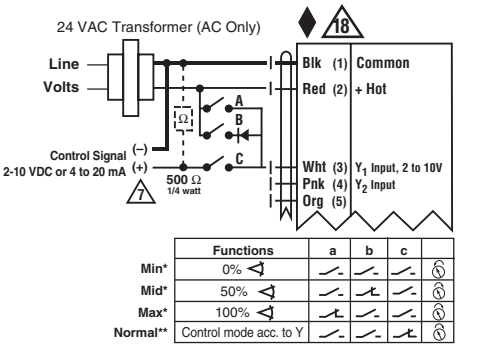


**Override Control Min, Mid, Max Postions**

### Notes:

- ♦ Meets cULus requirements without the need of an electrical ground connection
- (A) Actuators with appliance cables are numbered.
- 2 Actuators may be connected in parallel. Power consumption and input impedance must be observed.
- 3 Actuators may also be powered by 24 VDC.
- 5 Only connect common to neg. (-) leg of control circuits.
- 7 A 500 Ω resistor converts the 4 to 20 mA control signal to 2 to 10 VDC.
- 8 Control signal may be pulsed from either the Hot (Source) or Common (Sink) 24 VAC line.
- 9 Contact closures A & B also can be triacs. A & B should both be closed for the triac source and open for triac sink.
- 10 For triac sink the Common connection from the actuator must be connected to the Hot connection of the controller. Position feedback cannot be used with a triac sink controller. The actuator internal common reference is not compatible.
- 18 Actuators with plenum rated cable do not have numbers on wires; use color codes instead.

| | | | | |
|---|---|---|---|---|
| BRN | Brown | Marron | Brun | Marrom |
| BLU | Blue | Azul | Bleu | Azul |
| GRN | Green | Verde | Vert | Verde |
| ORG | Orange | Anaranjado | Orange | Alaranjado |
| PNK | Pink | Rosado | Rosa | Cor-de ros |
| WHT | White | Blanco | Blanc | Branco |
| RED | Red | Rojo | Rouge | Vermelho |
| BLK | Black | Negro | Noir | Preto |