70920-00001.C

i

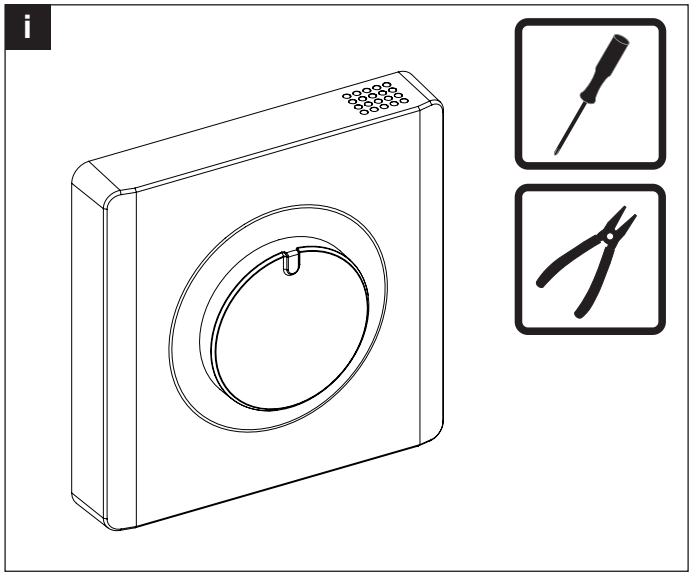

1

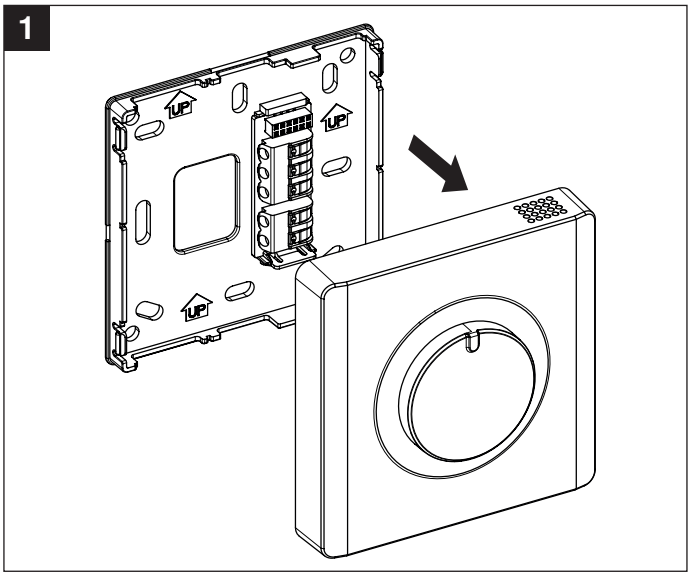

2a

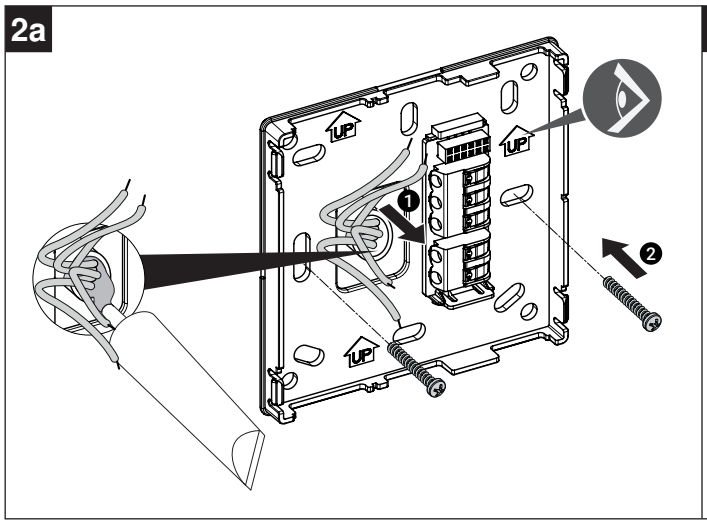

2b

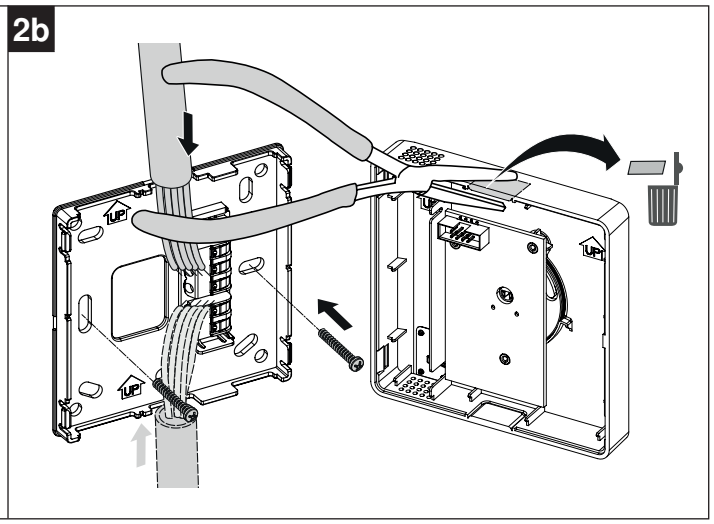

3

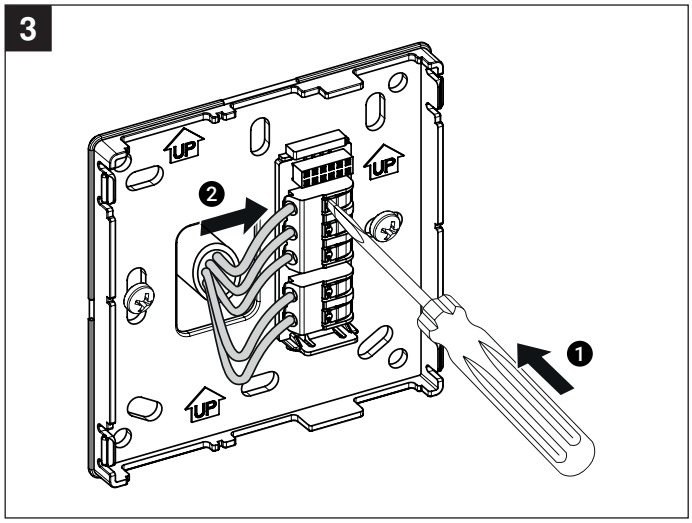

4

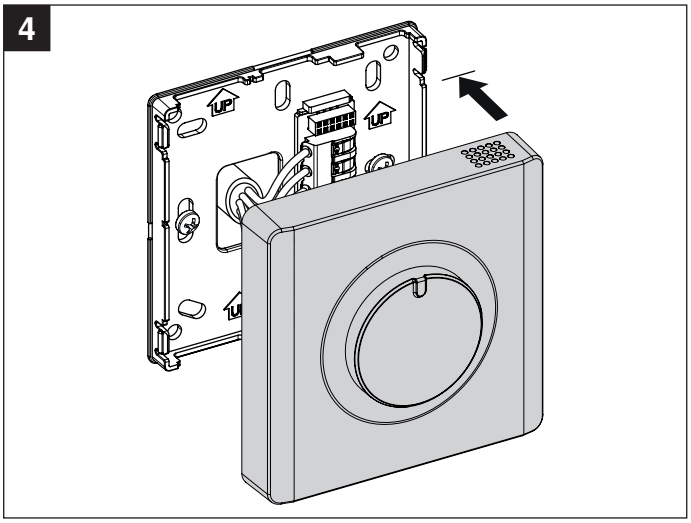

www.belimo.com

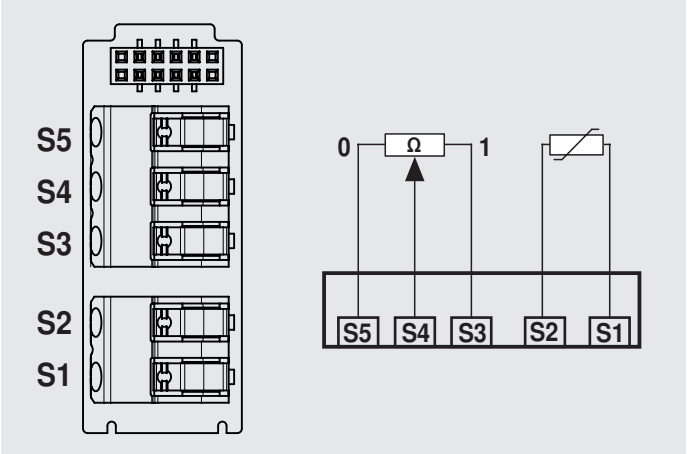
S5
S4
S3
S2
S1
0
Ω
1
S5
S4
S3
S2
S1

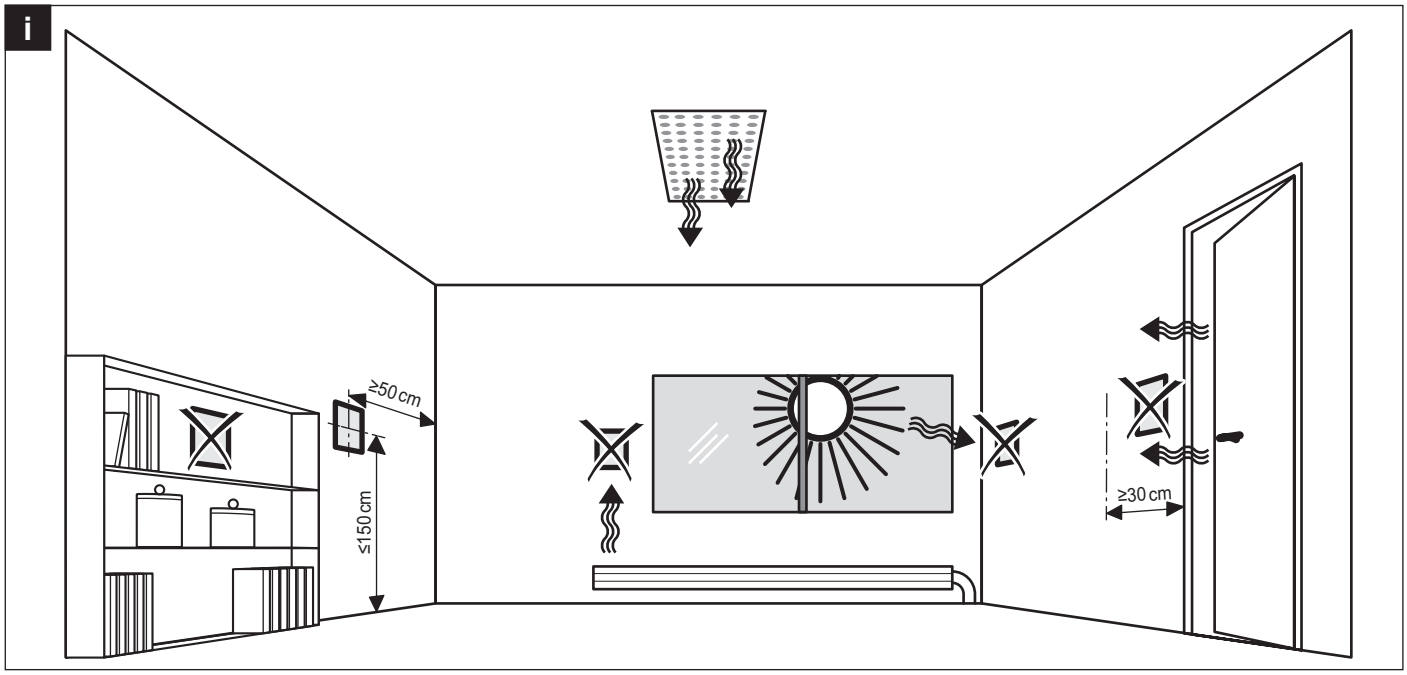
i
≥50 cm
≤150 cm
≥30 cm