72134-00001.B

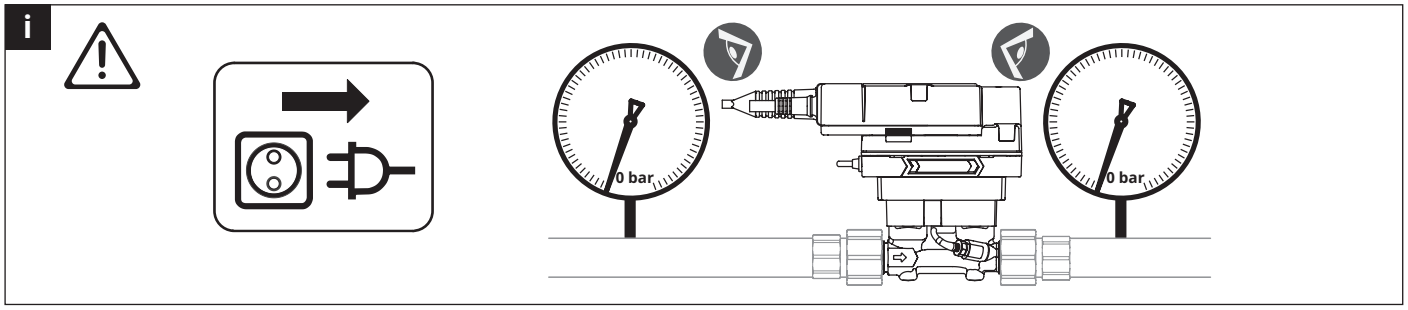

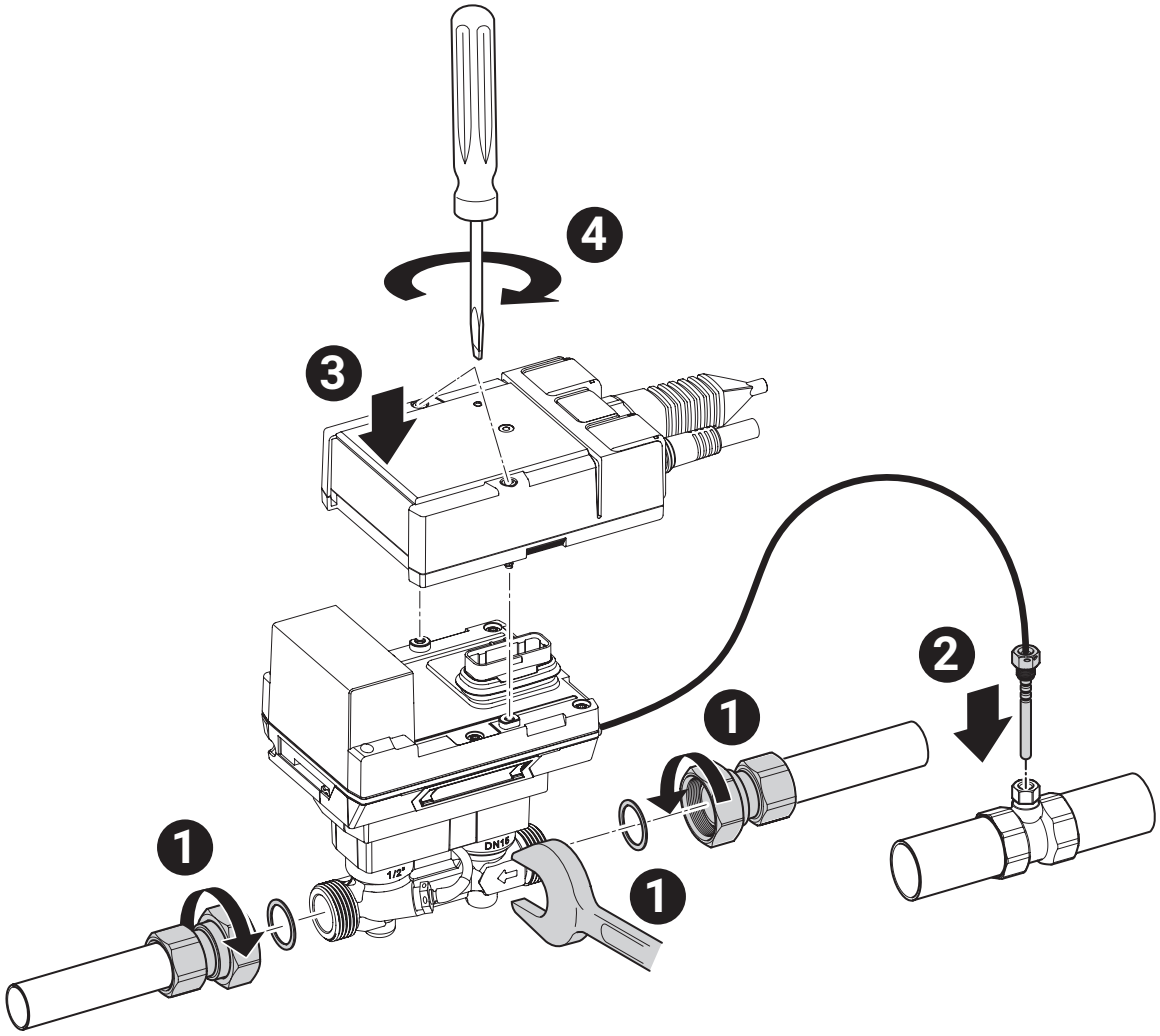

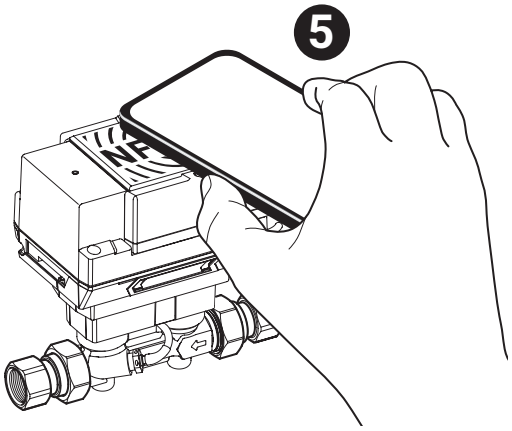

www.belimo.com/safety