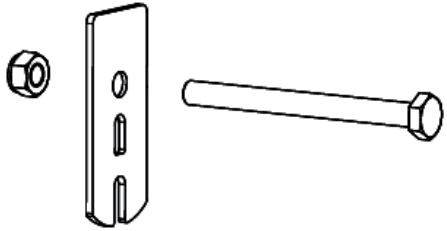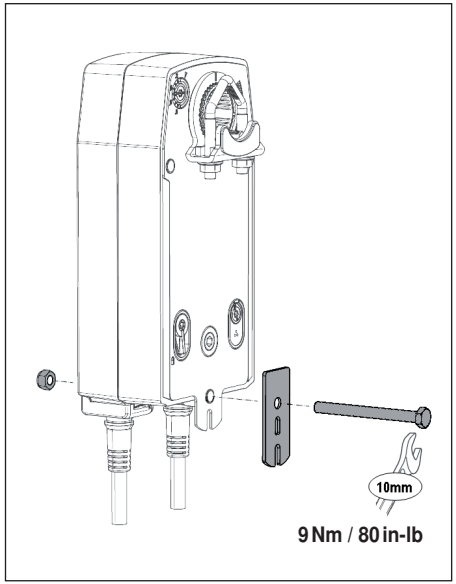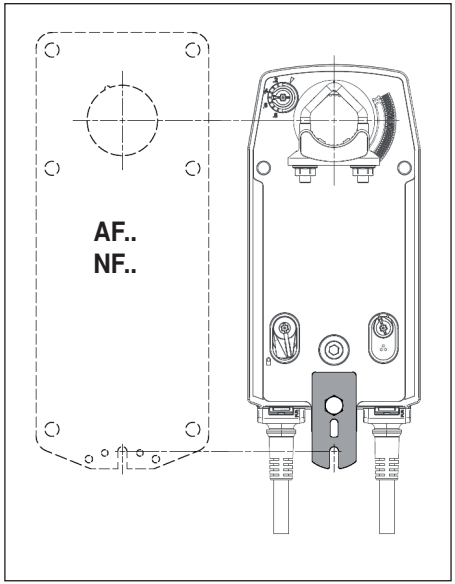71107-00001.C