71077-00001.B

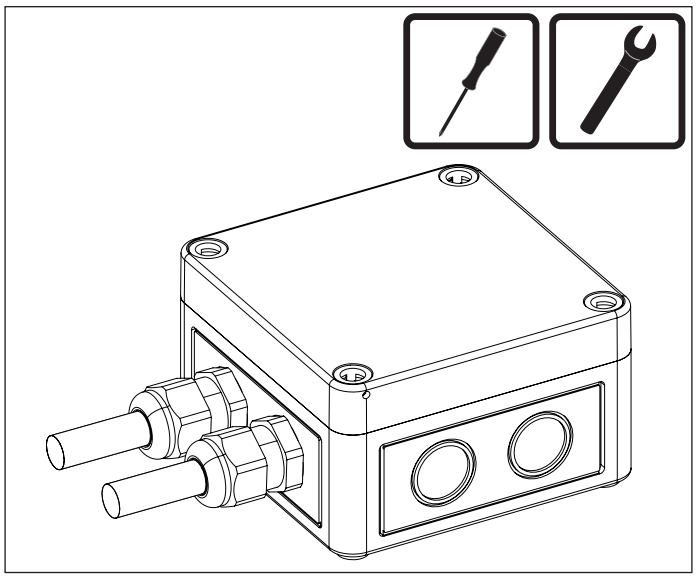

1

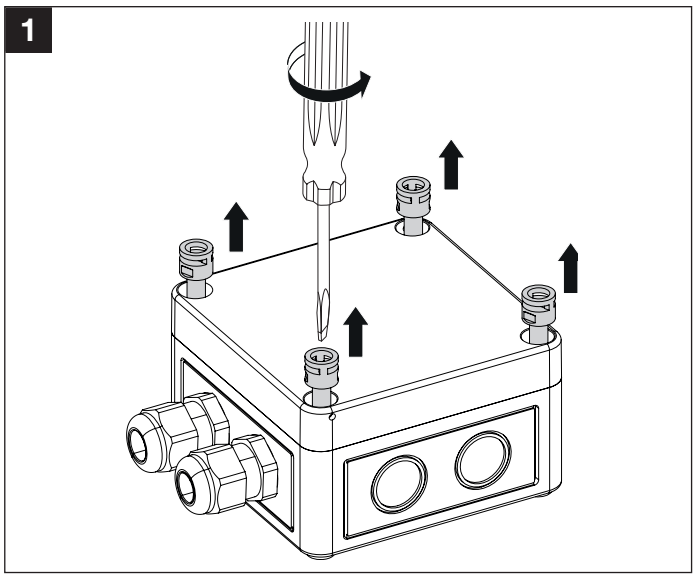

2

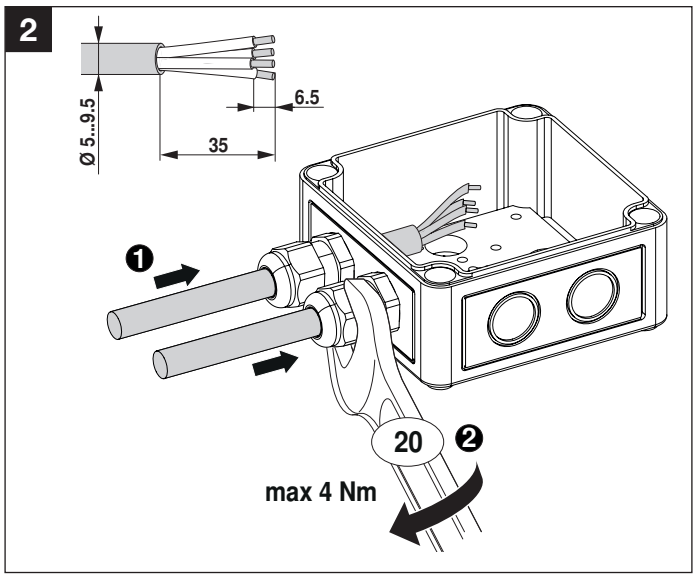

3

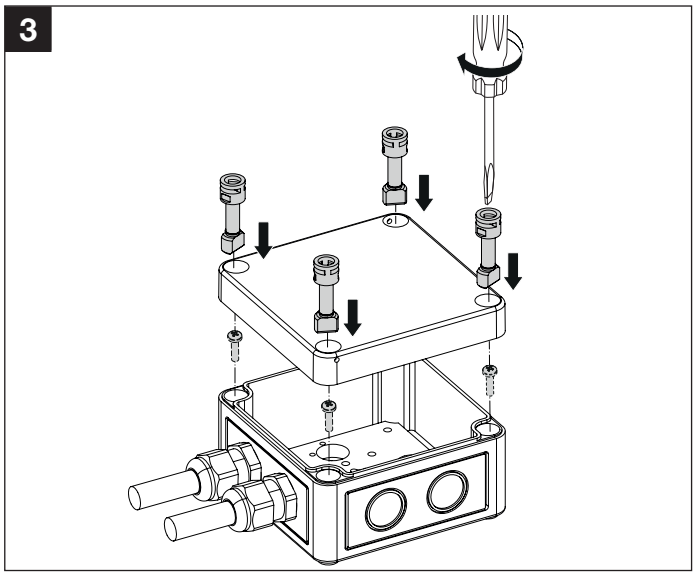

i

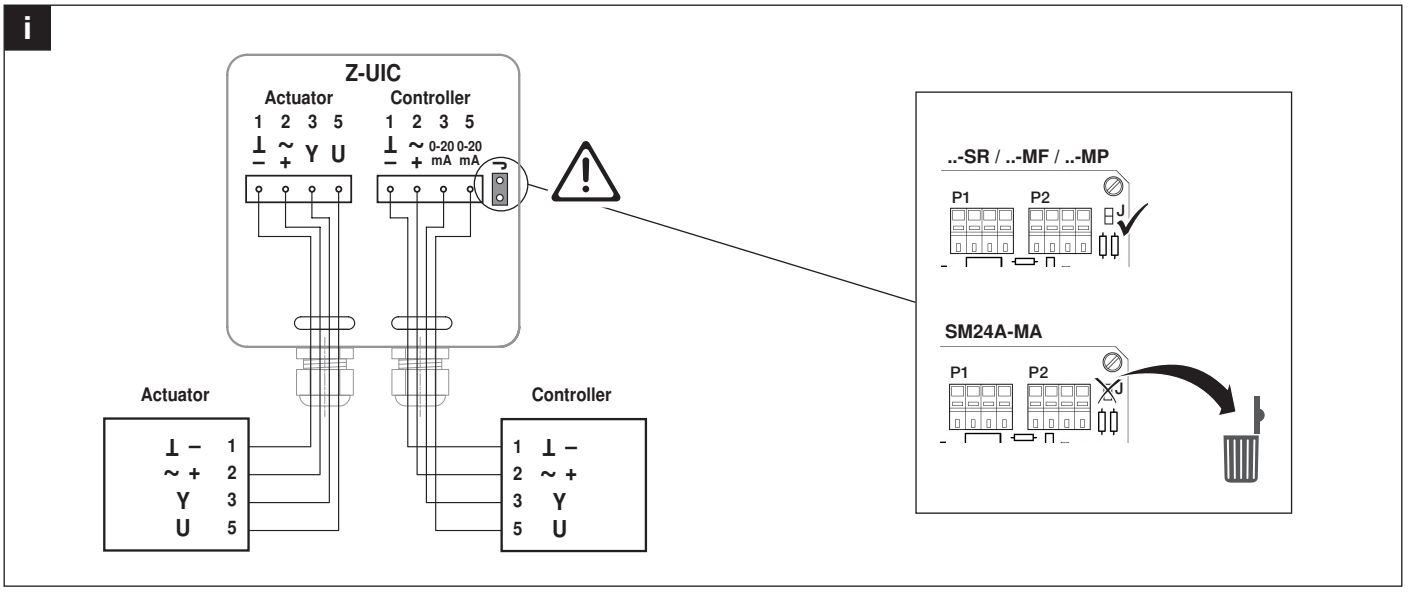

www.belimo.com/safety