72007-00001.C

1

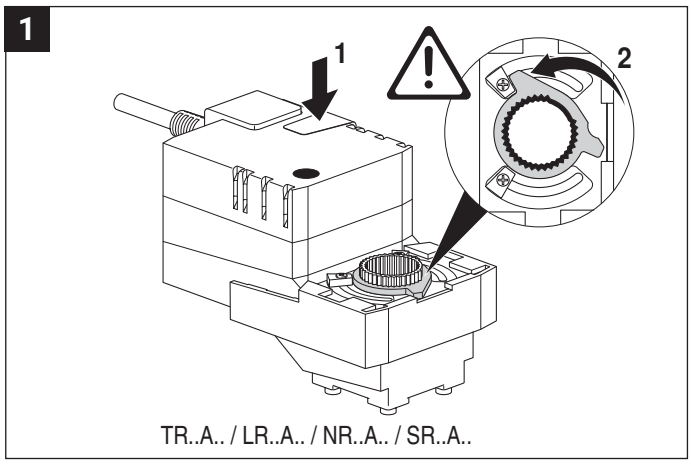

2

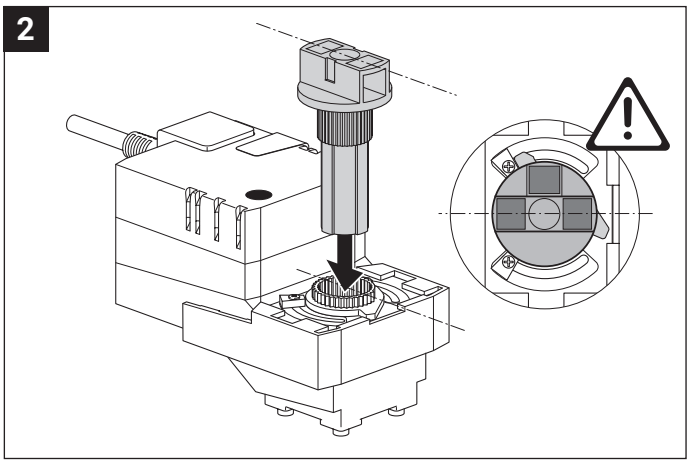

3

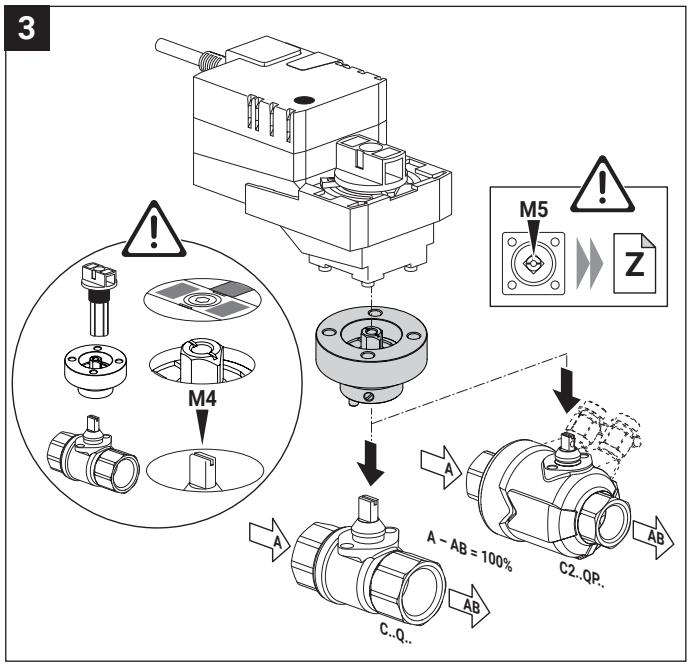

4

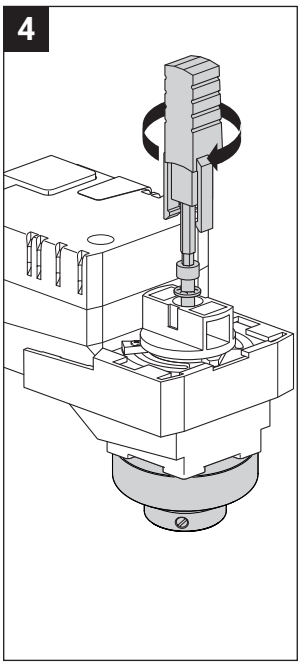

5

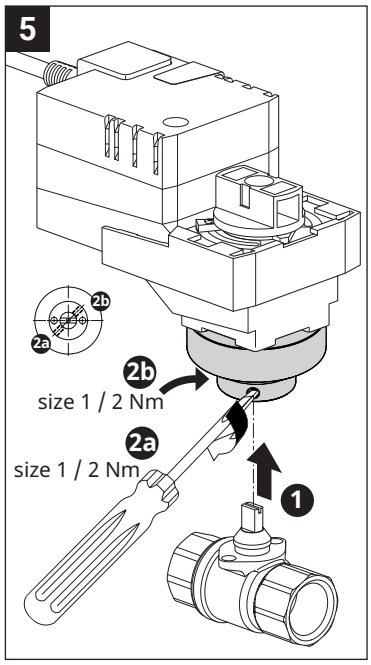

6

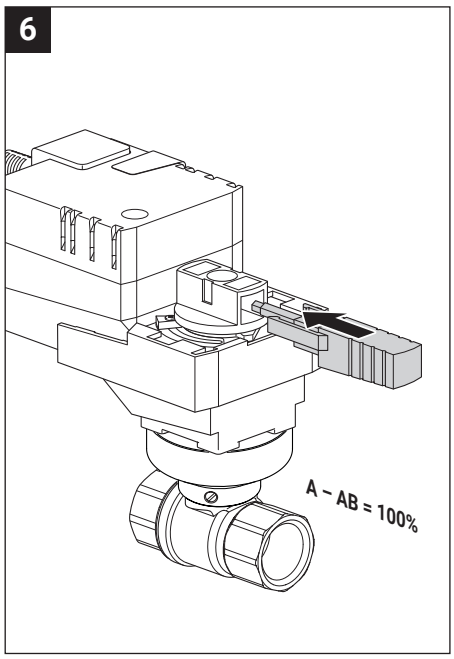

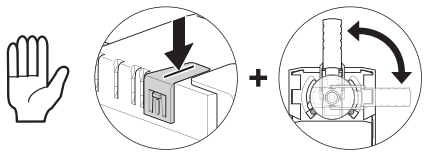

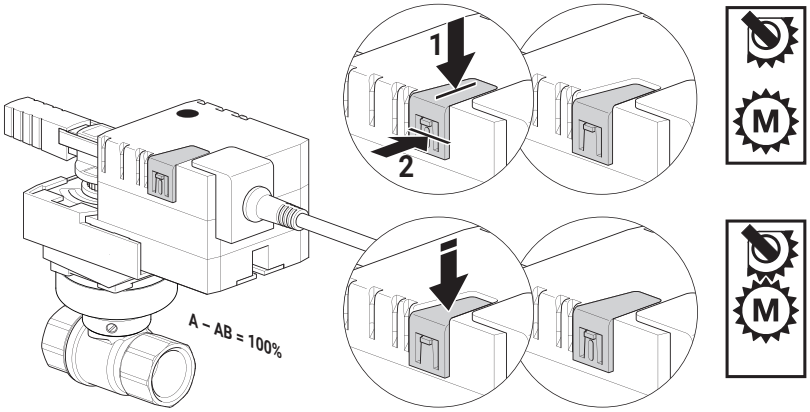

www.belimo.com/safety